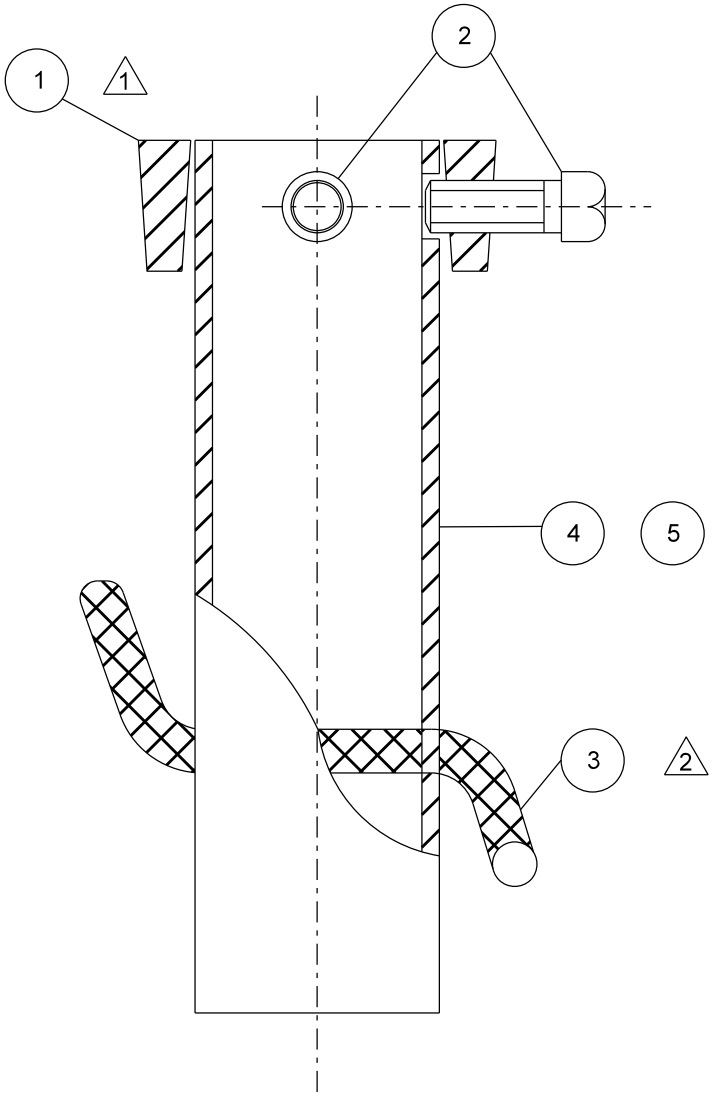

QTYS.		ITEM	P/N	PART NAME	DETAILS
		1	TRAF-5120	COLLAR	
		2	-	SET SCREW, SQ. HD., CUP PT.	5/8"-11"x1 1/2" ZINC OR CAD. PL.
		3	-	RE-BAR	#4x8" 2
		4	TRAF-5130-1	SLEEVE	15"
		5	TRAF-5130-2	SLEEVE	30" PRECAST FOUNDATION
TRAF-5110-2	TRAF-5110-1				

1 COLLAR PLACED WITH WIDE FACE TOWARDS SCREW END OF ASSEMBLY.

2 REBAR BENT AT APPROX. 90° AT APPROX. 2" FROM EACH END.

NO SCALE

Minneapolis
City of Lakes

MINNEAPOLIS
DEPARTMENT OF PUBLIC WORKS

DRAWN: CLK | DATE: 4/30/14

APPROVED: DRP | DATE: 4/30/14

COLLAR - SIGN

2" SIGN POST - ASSEMBLY

TRAF-5120, TRAF-5130

STANDARD PLATE NO. TRAF-5110-R1