NOTE:

1. MATERIAL - STAINLESS STEEL ASTM A240 (TYPE 201L) 50,000 PSI MIN YIELD.
2. BASE PLATE MATERIAL - STAINLESS STEEL ASTM A240 (TYPE 304L) 25,000 PSI MIN YIELD
3. SLIPFITTER MATERIAL- STAINLESS STEEL ASTM A312 (TYPE 304L) 35,000 PSI MIN. YIELD.
4. FINISH-MARQUETTE AVE NATURAL ALUMINUM OR UPS BROWN AS SPECIFIED

PROVIDE (4) FEMALE THREADED SEMI-BLIND FLANGES CONTINUOUS WELDED INTO SHAFT. THE FLANGES SHALL BE NOMINAL 1 1/2" PIPE FITTING SET AT 0°, 90°, 180°, 270° TO THE TRANFORMER BASE COVER

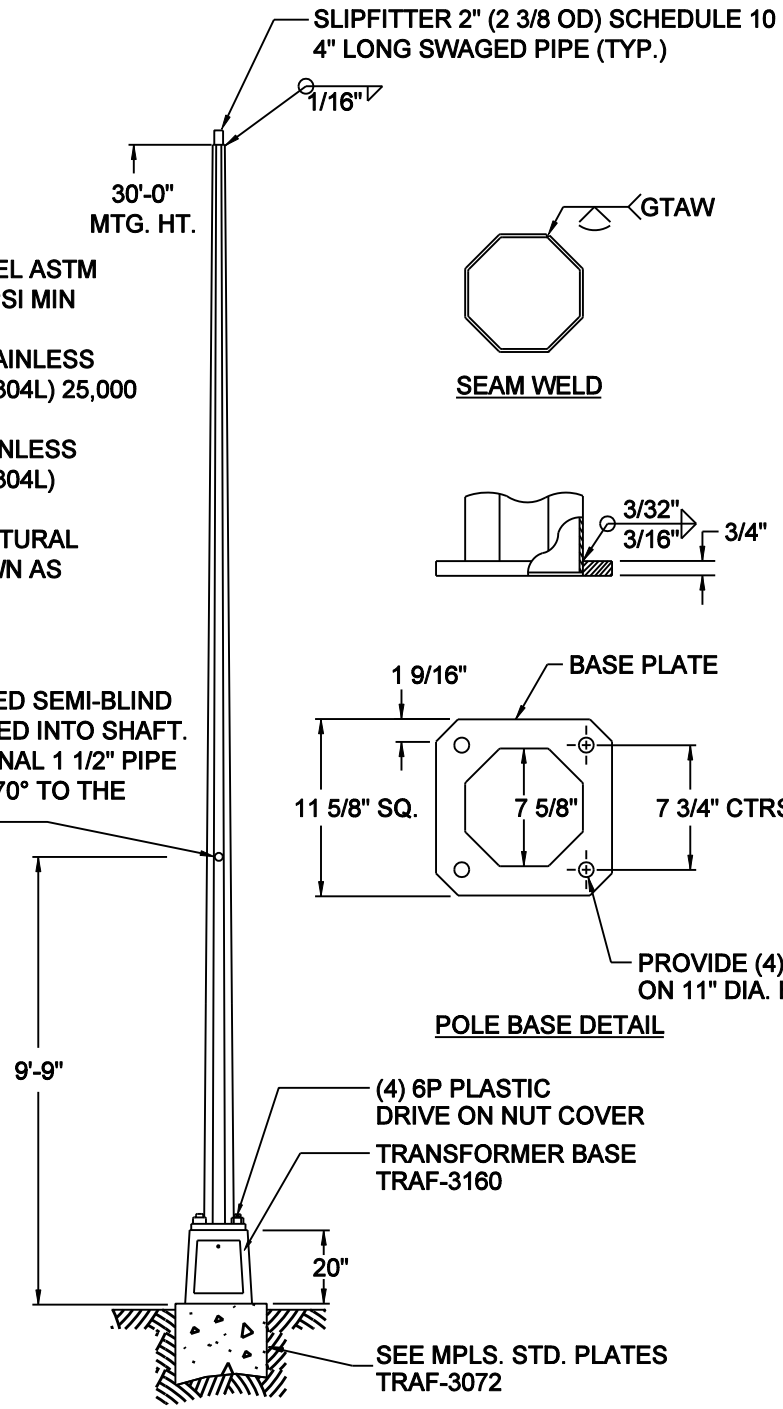

NO SCALE

MINNEAPOLIS DEPARTMENT OF PUBLIC WORKS		STANDARD - ST. LIGHT M-30' STAINLESS STEEL W/ SIGNAL FITTINGS REFERENCE PLATES: TRAF-3072, TRAF-3160	STANDARD PLATE NO. TRAF-3293-R1
DRAWN: CLK	DATE: 5-3-11		
APPROVED: DWH	DATE: 5-3-11		